BARMAG

# high viscosity drum pump with stuffing box

## without bufferfluid -202Z

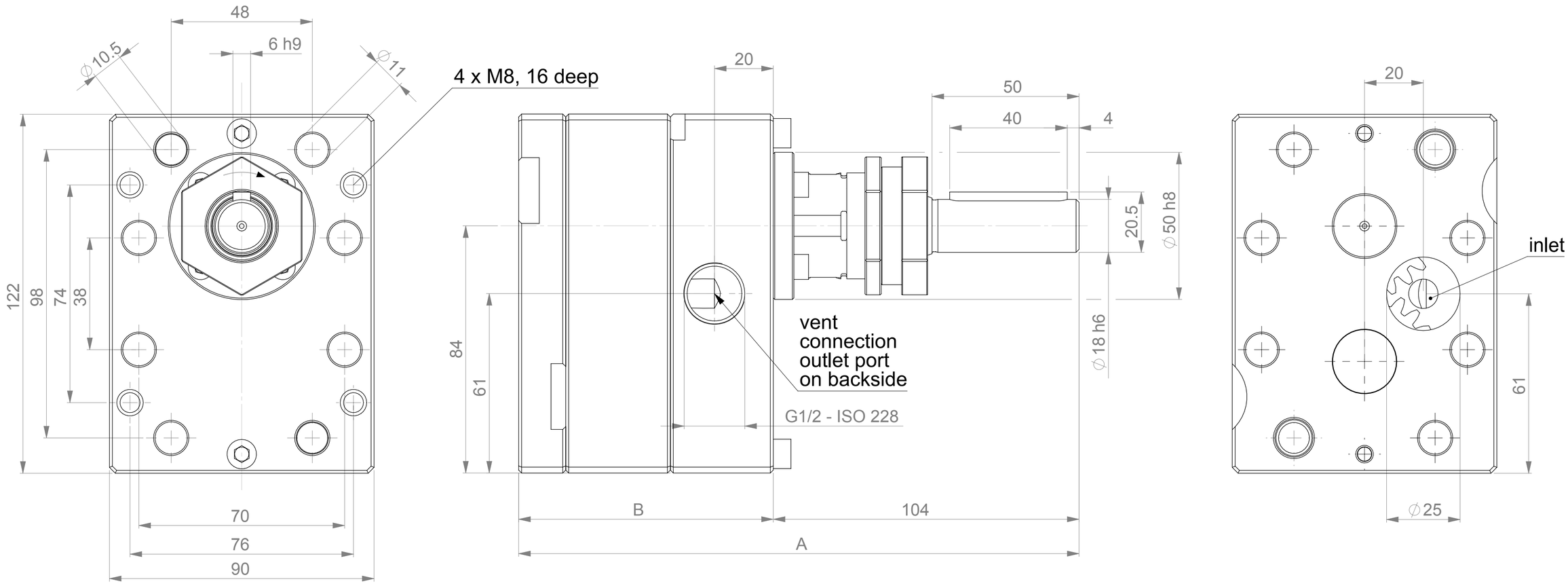


## prepared for bufferfluid -203Z

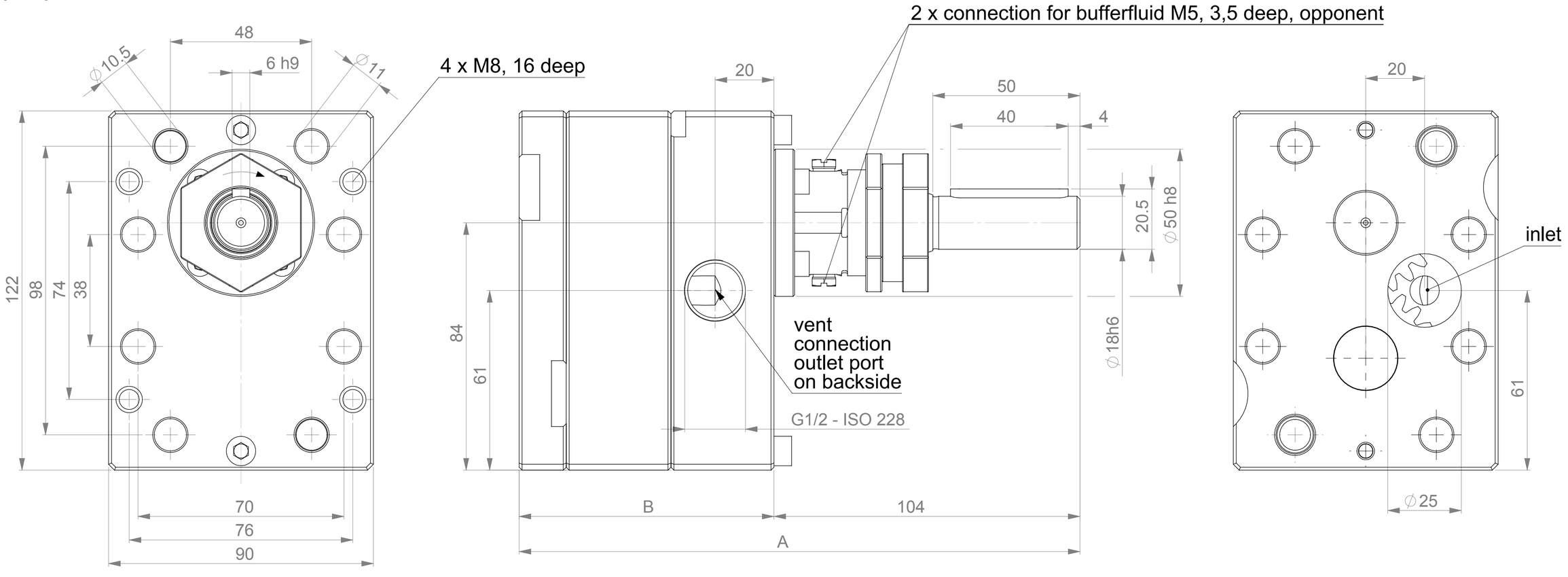


| pumptype | feed capacity cc/rev | A mm | B mm | weight ca. kg | max. inlet pressure bar | max. outlet pressure bar | temperature max. °C |
|---|---|---|---|---|---|---|---|
| GA121G-1-202Z/ -203Z | 1 x 1.25 | 160,2 | 56,2 | 4,9 | 10 | 250 | 225 |
| GA251G-1-202Z/ -203Z | 1 x 2.5 | 163,9 | 59,9 | 5,3 | 10 | 250 | 225 |
| GA501G-1-202Z/ -203Z | 1 x 5 | 163,9 | 59,9 | 5,2 | 10 | 250 | 225 |
| GAA01G-1-202Z/ -203Z | 1 x 10 | 172,8 | 68,8 | 5,9 | 10 | 250 | 225 |
| GAB01G-1-202Z/ -203Z | 1 x 20 | 190,6 | 86,6 | 7,5 | 10 | 250 | 225 |
| GAC01G-1-202Z/ -203Z | 1 x 30 | 208,4 | 104 | 9,0 | 10 | 250 | 225 |