BARMAG

hotmelt metering pump

Technical Data Sheet GX-Series
Execution with needle bearing

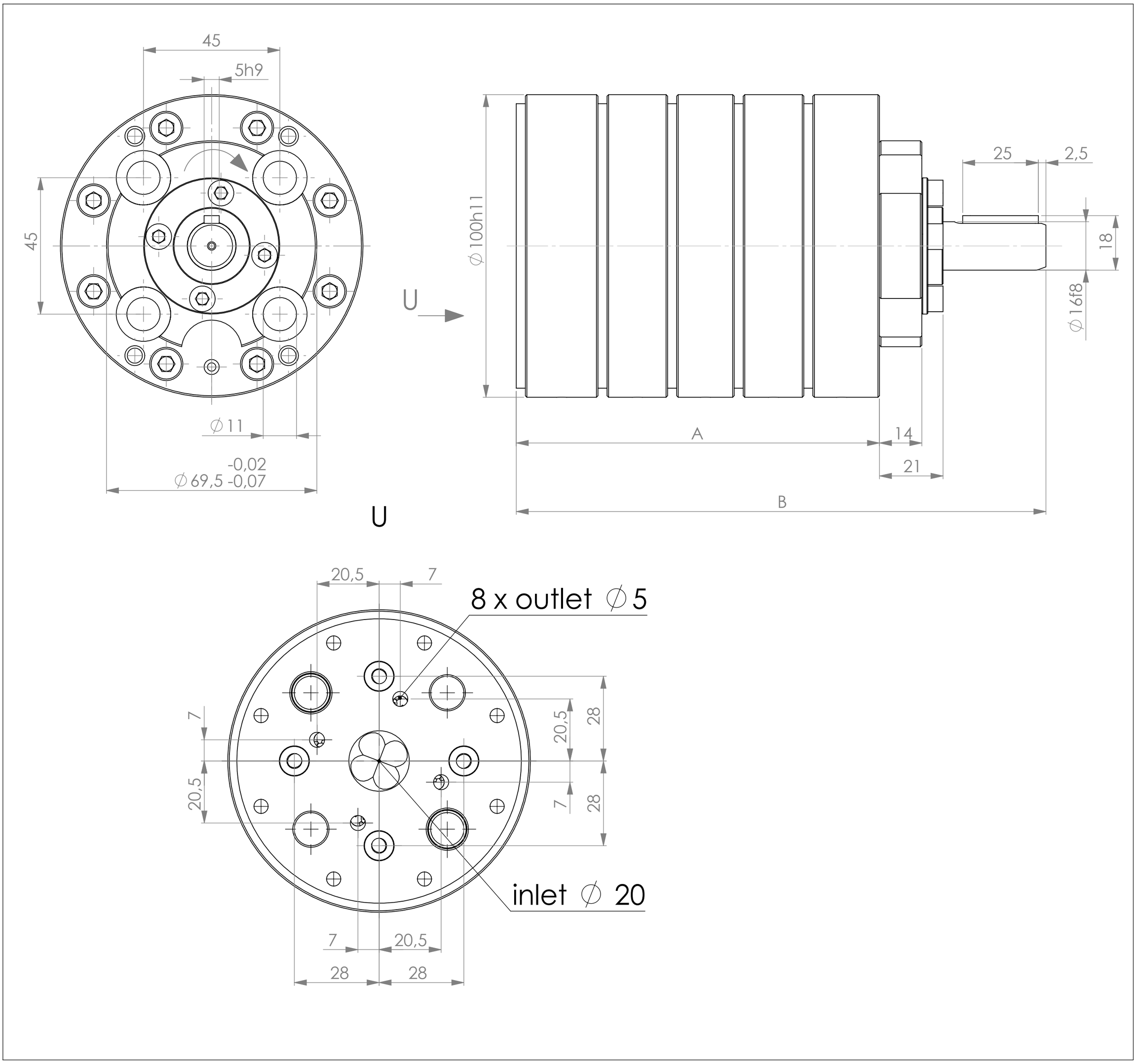

Assembly dimensions

pump model	feed capacity cm³/rev	A mm	B mm	weight ca. kg	max. inlet pressure bar	max. outlet pressure bar	temperature max. °C
GXD68F	8 x 0.6	90	145	5,2	100	200	225
GX128F	8 x 1.2	90	145	5,2	100	200	225
GX248F	8 x 2.4	100	155	5,7	100	200	225
GX488F	8 x 4.8	120	175	6,9	100	200	225